THE STATE OF TEXAS

KNOW ALL BY THESE PRESENTS

COUNTY OF TARRANT

AMENDMENT NO. 2 TO THE AGREEMENT FOR WATER SERVICE BETWEEN THE CITY OF FORT WORTH AND THE CITY OF KELLER

This Amendment No. 2 is made and entered into by and between the City of Keller, acting herein by and through its City Manager, Mark Hafner, hereinafter referred to as CUSTOMER and the City of Fort Worth, acting herein by and through its Assistant City Manager, Jesus "Jay" Chapa, hereinafter referred to as FORT WORTH, all of Tarrant County, State of Texas, (collectively the "PARTIES") witnesseth:

WHEREAS, FORT WORTH and CUSTOMER have entered in an Agreement for Water Service known as Fort Worth City Secretary Contract No. 41100 ("CONTRACT"); and

WHEREAS, the parties amended the Contract on or about March 10, 2015 to provide for the allocation of cost and capacity of Northside II 48-inch water main; and

WHEREAS, pursuant to the Amendment, Keller has contributed to and is entitled to use 18 MGD at the North Beach Wholesale meter location as shown on **EXHIBIT A** to the Contract; and

WHEREAS, due to the additional capacity, **EXHIBIT A** describing the CUSTOMER' meters must be revised.

NOW THEREFORE, the PARTIES agree to amend the CONTRACT as follows:

SECTION I: AMENDMENT TO EXHIBIT A OF THE CONTRACT

The CONTRACT shall be amended to include the following as **EXHIBIT A** as shown in the attachment to this Amendment No. 2.

SECTION II: CLARIFICATION OF OWNERSHIP TO THE ALTA VISTA PUMP STATION AND METER VAULT

Without changing any terms and conditions of the Contract, the Parties wish to clarify the ownership of the improvements at the Alta Vista Pump Station and meter vault to serve the additional capacity. The Parties agree that each City's ownership to such improvements is as shown in **EXHIBIT B.**

SECTION III: ALL OTHER TERMS AND CONDITIONS AND EFFECTIVE DATE

All other terms and conditions shall be remain the same. This Amendment No.2 shall become effective upon full and complete execution of each party below.

EXECUTED this ___day of _____, 2018.

CITY OF FORT WORTH	**CITY OF KELLER**
_____	_____
JESUS "JAY" CHAPA ASSISTANT CITY MANAGER	By: MARK HAFNER CITY MANAGER
DATE: _____	DATE: _____
APPROVED AS TO FORM AND LEGALITY	APPROVED AS TO FORM AND LEGALITY
_____	_____
CHRISTA LOPEZ-REYNOLDS SR. ASSISTANT CITY ATTORNEY	BY: L. STANTON LOWRY ATTORNEY
ATTEST	ATTEST
_____	_____
MARY KAYSER CITY SECRETARY	KELLY BALLARD CITY SECRETARY

EXHIBIT A

CUSTOMER METER

Customer	Meter ID	Address	Meter Size (in.)	Pressure Plane	Comment	Primary
Keller	Keller #2 (new)	4705 Ray White Road	20	ES2	N/A	1

EXHIBIT "B"

Limits of Ownership

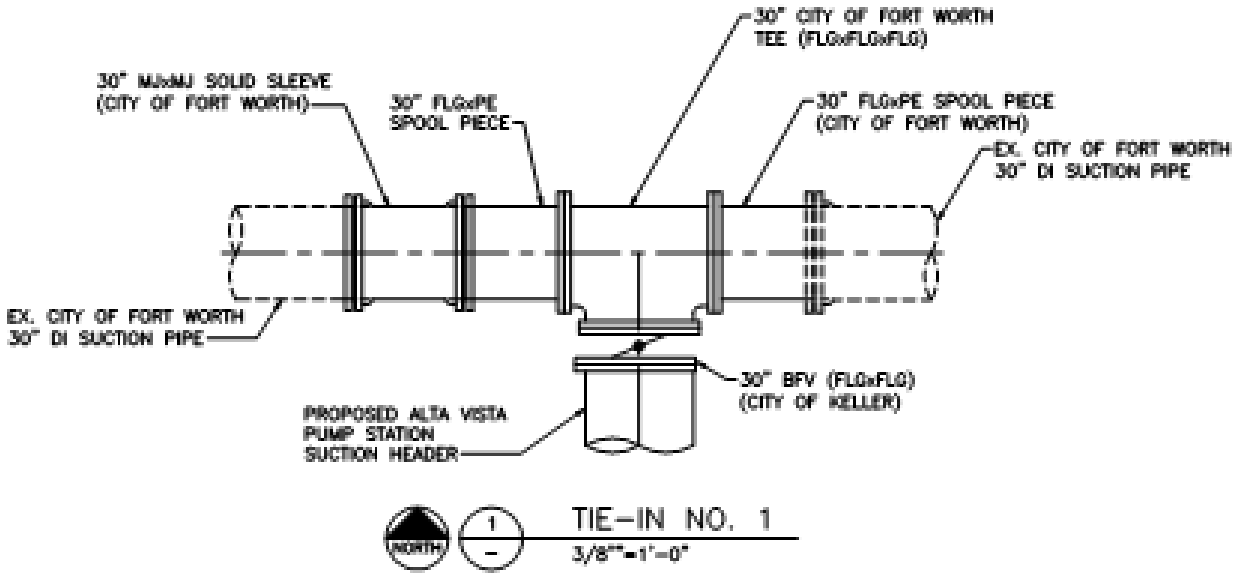

Notes:

1) Clarification on Limits of Ownership.
    a. City of Fort Worth Ownership
        i. Proposed Tee at cut-in to yard piping on-site:
        ii. Meter vault as shown on the plans, "City of Keller, Texas Construction Plans for Alta Vista Pump Station Expansion to 18 MGD, City Project No. 600-CIP-1201" .
    b. City of Keller Ownership:
        i. Downstream of cut-in tee through pump station to Meter vault
        ii. Everything downstream of meter vault.

Exhibit B
Page 2 of 5

NOTES

1. SEE SPECIFICATION SECTION 01 35 00, SPECIAL PROCEDURES FOR PIPING TIE-INS AND CONSTRUCTION SEQUENCING.
2. SEE SPECIFICATION SECTION 01 40 00, QUALITY REQUIREMENTS FOR PRESSURE TESTING.
3. SEE SPECIFICATIONS SECTION 33 10 13, DISINFECTING OF WATER UTILITY DISTRIBUTION FOR DISINFECTION REQUIREMENTS.
4. SERVICE LINES, CLEANOUTS AND OTHER DETAILS NOT SHOWN SHALL COMPLY WITH CITY OF FORT WORTH STANDARD DETAILS. CONTRACTOR IS RESPONSIBLE FOR OBTAINING A PERMIT AND WATER METER FOR SERVICES.
5. ALL BURIED YARD PIPING SHALL BE ENCASED IN FLOWABLE FILL.
6. ALL BURIED PIPING SHALL HAVE TRACER WIRE INSTALLED. COORDINATE TEST HEAD LOCATIONS IN FIELD WITH OWNER.
7. CONTRACTOR SHALL VERIFY LOCATION AND DEPTH OF ALL UTILITIES PRIOR TO MANUFACTURING PIPE AND CONSTRUCTION. POTHOLING IS REQUIRED FOR ALL UTILITIES ON-SITE. LAY DRAWINGS SHALL BE ADJUSTED AS NECESSARY TO REFLECT ACTUAL LOCATIONS. NO EXCAVATION WILL BE ALLOWED FOR CONSTRUCTION UNTIL COMPLETE SURVEY NOTES ARE SUBMITTED.

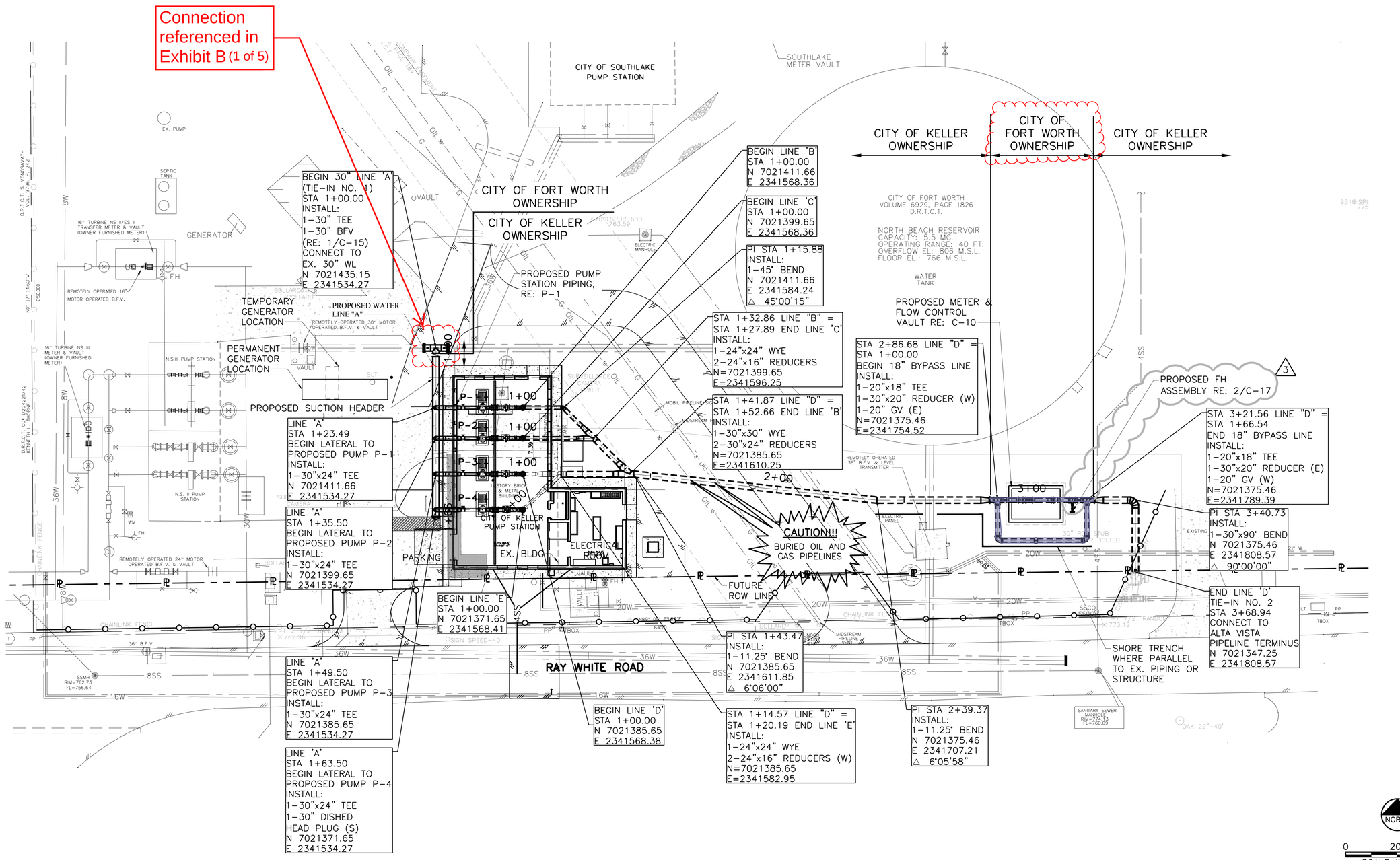

ISSUED FOR CONSTRUCTION

Freese and Nichols, Inc. Texas Registered Engineering Firm F-2144

ISSUED FOR CONSTRUCTION ON 10/22/2018

THE SEAL THAT ORIGINALLY APPEARED ON THIS DOCUMENT WAS AUTHORIZED BY KELLY W. WOODS # 93766. IT MAY NOT BE REPRODUCED OR ALTERED IN ANY ALTERED FORM OR FORMAT WITHOUT PRIOR WRITTEN CONSENT OF FREESE AND NICHOLS, INC. TBPE FIRM F-2144 UNDER THE TEXAS ENGINEERING PRACTICE ACT.

FREESE AND NICHOLS
4055 International Plaza, Suite 200
Fort Worth, Texas 76109-4895
Phone – (817) 735-7300
Fax – (817) 735-7491

CITY OF KELLER, TEXAS
ALTA VISTA PUMP STATION EXPANSION
CIVIL
YARD PIPING PLAN VIEW

NO.	ISSUE	BY	DATE	F&N JOB NO. KEL13205	DATE 06/04/18
				DESIGNED	RMO
				DRAWN	SB
				REVISED	MDC
				CHECKED	KWW
				FILE NAME	CV-PST-PL-PIPE01.DWG
3	PCM NO.1		KWW 10/22/18		
2	ISSUED FOR CONSTRUCTION		KWW 10/08/18		
1	ADDENDUM NO. 1		KWW 8/13/18		

VERIFY SCALE Bar is one inch on original drawing. If not one inch on this sheet, adjust scale.
0 1

SHEET C-5
SEQ. 7

ACAD Rel 21.0s (LMS Tech) User: 02930 Office:
N:\util\Drawings\CV-PST-PL-PIPE01.dwg LAYOUT: YARD PIPING PLAN VIEW
Oct 22, 2018 – 3:28pm LTS: 1 PSLTS: 1 TWIST:
REFERENCES: N:\Standard\34BORDER.DWG, N:\util\Base\CV-PST-PL-BASE01.dwg, N:\util\Survey\CV-ALL-PL-TOPO.dwg, N:\elec\Base\EL-ELR-PL-BASE.dwg, N:\arc\Base\Ar-PSI-PL-Base.dwg, N:\st\Base\ST-PST-PL-BASE.dwg, N:\st\Base\ST-PST-PL-BASER.dwg, N:\st\

Oscar Cantu 10/22/2018 3:28 PM N:\UTIL\DRAWINGS\CV-PST-PL-PIPE01.DWG

Exhibit B
Page 3 of 5

NOTES

1. CONTRACTOR SHALL VERIFY LOCATION AND DEPTH OF ALL UTILITIES PRIOR TO MANUFACTURING PIPE AND CONSTRUCTION. POTHOLING IS REQUIRED FOR ALL UTILITIES ON-SITE. LAY DRAWINGS SHALL BE ADJUSTED AS NECESSARY TO REFLECT ACTUAL LOCATIONS. NO EXCAVATION WILL BE ALLOWED FOR CONSTRUCTION UNTIL COMPLETE SURVEY NOTES ARE SUBMITTED.

2. ALL BURIED PIPING SHALL BE IN ENCASED IN FLOWABLE FILL. WHERE PROPOSED PIPE CROSSES EXISTING LINES, SUPPORT EXISTING PIPE WITH FLOWABLE FILL UP TO THE SPRINGLINE OF THE EXISTING PIPE.

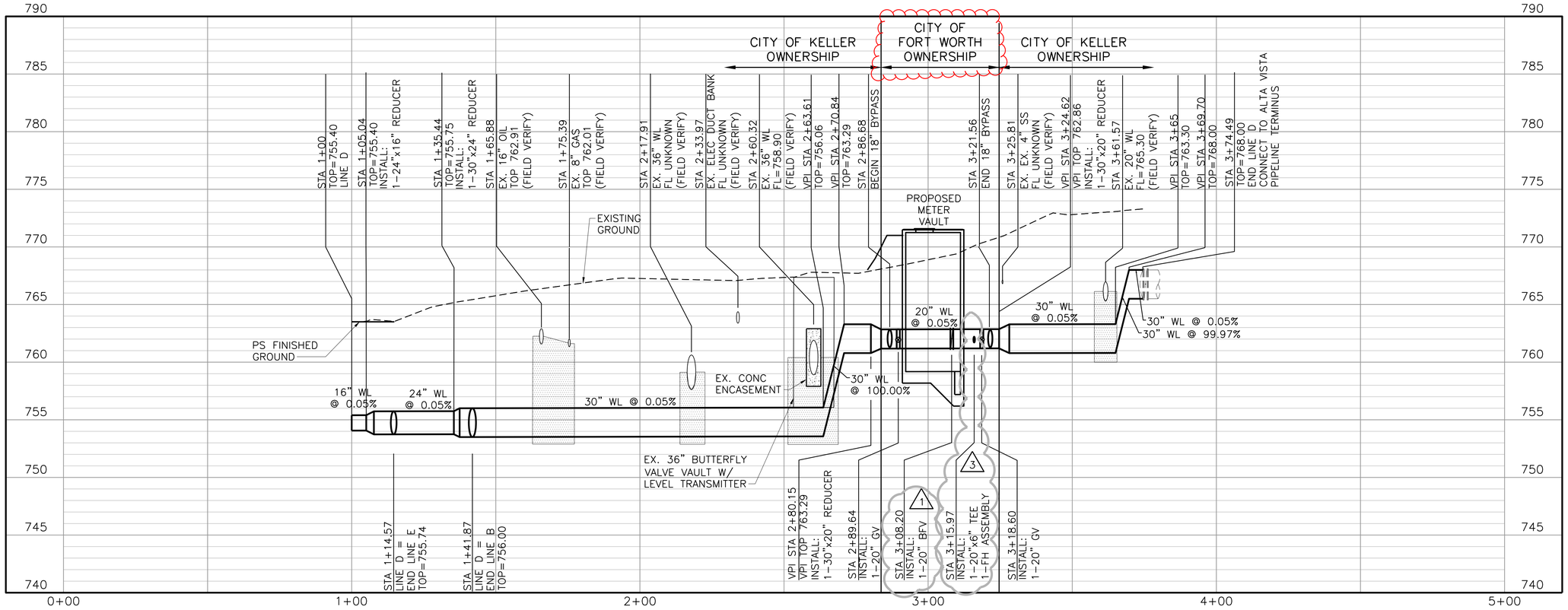

PROFILE – LINE D

0 20' 40'
SCALE IN FEET HORIZONTAL
0 5' 10'
VERTICAL SCALE IN FEET

ISSUED FOR CONSTRUCTION

Freese and Nichols, Inc.
Texas Registered Engineering Firm F-2144

ISSUED FOR CONSTRUCTION ON 10/8/2018

THE SEAL THAT ORIGINALLY APPEARED ON THIS DOCUMENT WAS ISSUED BY: KELLY L. WHITE TEXAS NO. 83984 DATE: 10/22/2018 THE ELECTRONIC FORM OF THIS DOCUMENT WITHOUT NOTIFICATION OF THE RESPONSIBLE ENGINEER IS AN OFFENSE UNDER THE TEXAS ENGINEERING PRACTICE ACT.

FREESE AND NICHOLS
4055 International Plaza, Suite 200
Fort Worth, Texas 76109-4895
Phone: (817) 735-7300
Fax: (817) 735-7491

CITY OF KELLER, TEXAS
ALTA VISTA PUMP STATION EXPANSION
CIVIL
YARD PIPING PROFILE VIEW

NO.	ISSUE	BY	DATE
1	PCM NO.1	KWW	10/22/18
0	ISSUED FOR CONSTRUCTION	KWW	10/08/18
1	ADDENDUM NO. 1	KWW	8/13/18

VERIFY SCALE Bar is one inch on original drawing. If not one inch on this sheet, adjust scale.

FAN JOB NO.	KEL13205
DATE	06/04/18
DESIGNED	RMO
DRAWN	SB
REVIEWED	MDC
CHECKED	KWW
FILE NAME	CV-PS-DT-DET13.DWG

SHEET C-6
SEQ. 8

ACAD Rel 21.0s (LMS Tech) User: 02930 Office:
N:\util\Drawings\CV-PS-DT-DET13.dwg LAYOUT: YARD PIPING PROFILE VIEW
Oct 22, 2018 - 3:17pm PSLTS: 1 TWST:
REFERENCES: N:\Standard\34BORDER.DWG N:\util\ENG\CV-ALL-PL-DESIGN.dwg N:\st\Base\ST-VAL-SC-BASE01.dwg N:\st\Base\ST-VAL-PL-BASE1.dwg N:\Standard\34BORDER-SEAL.dwg

Oscar Cantu 10/22/2018 3:17 PM N:\UTIL\DRAWINGS\CV-PS-DT-DET13.DWG

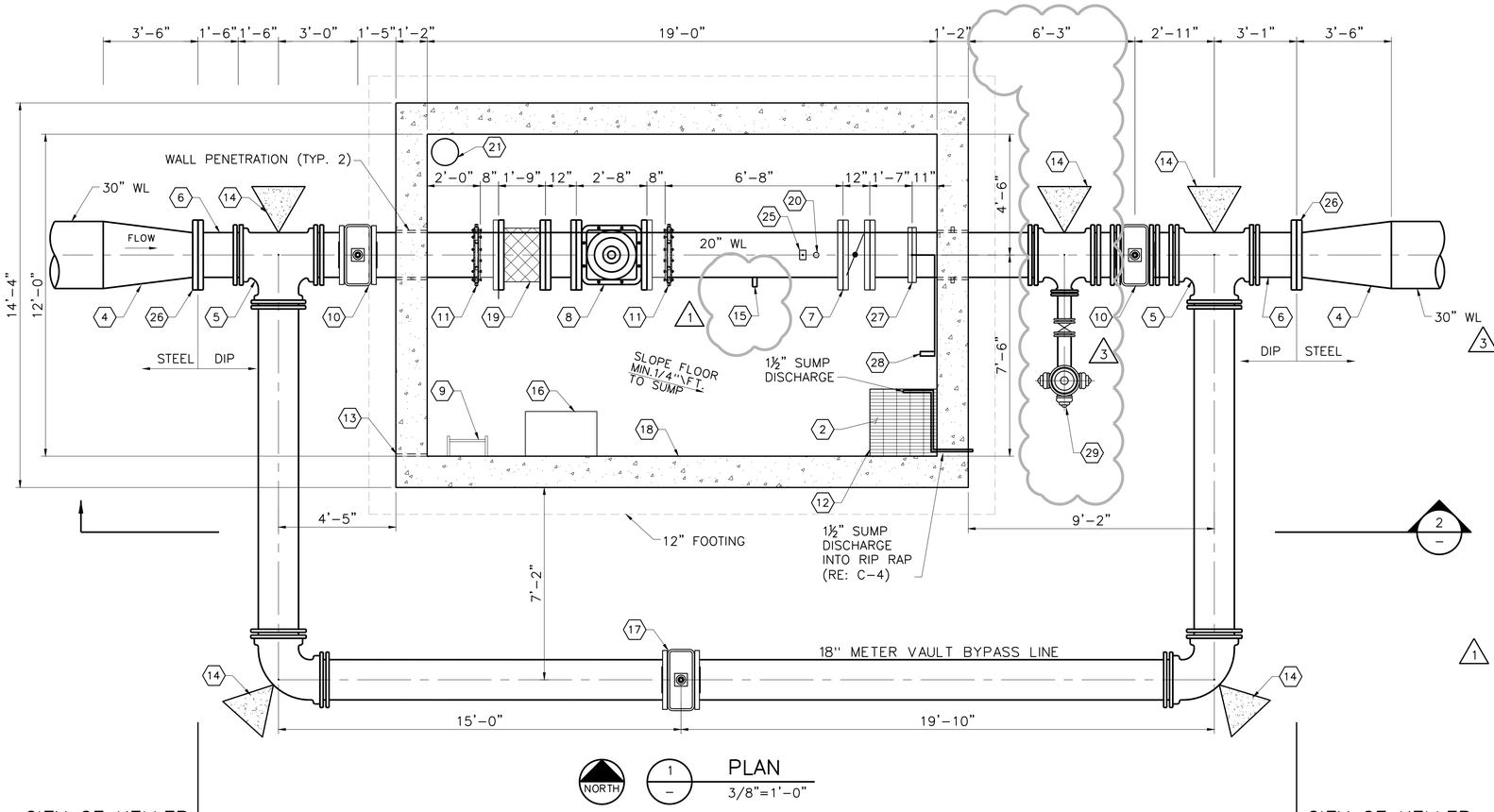

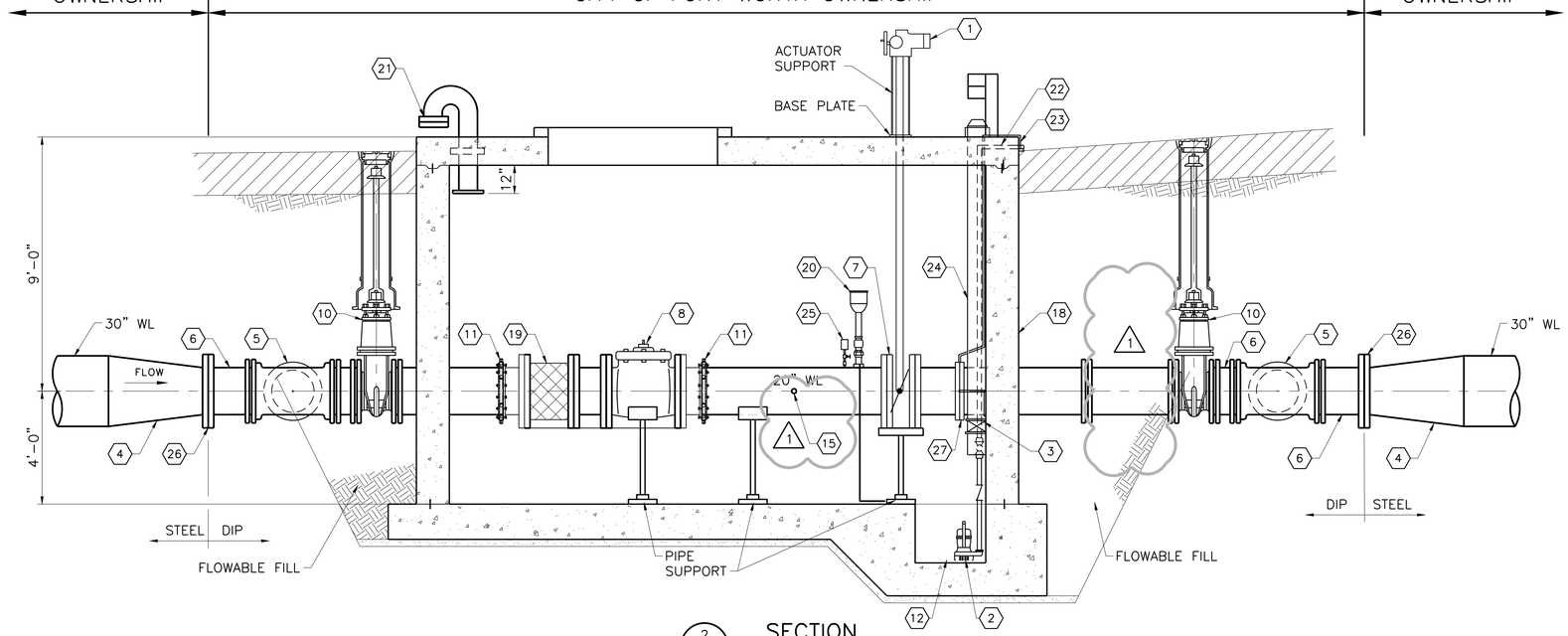

NOTES BY SYMBOL "⬡"

1. ACTUATOR MOUNTED ON FLOOR STAND PER MANUFACTURER RECOMMENDATION. ROUTE CONDUIT UP THROUGH SLAB & ADJACENT TO STAND.
2. SUMP PUMP
3. VENT FAN
4. 30"x20" FLG REDUCER
5. 20"X18" MJ TEE
6. 20" PLAIN END x FLG PIPE
7. 20" FLG MOTOR OPERATED BUTTERFLY VALVE
8. 20" FLOW METER
9. LADDER WITH SAFETY POST
10. 20" MJxMJ GATE VALVE
11. 20" RESTRAINED FLANGED COUPLING ADAPTER
12. 30"x30"x24" CONCRETE SUMP
13. DOOR DRAIN, FLUSH WITH SIDE WALL
14. CONCRETE BLOCKING
15. 2" TEST PORT
16. DEHUMIDIFIER
17. 18" MJxMJ GATE VALVE W/BOX PIPE W/LOCKING DEVICE
18. METER VAULT
19. METER STRAINER
20. 2" AIR VALVE ASSEMBLY
21. 90° RETURN BEND WITH STAINLESS STEEL INSECT SCREEN
22. CHLORINE ANALYZER. ROUTE DRAIN TO GRAVEL FILLED 3'x3'x3' SUMP ADJACENT TO VAULT
23. SAMPLING STATION
24. VAULT VENTILATOR
25. 1" OUTLET FOR PRESSURE TRANSMITTER
26. INSULATING FLANGE KIT
27. 2" TAPPING SADDLE. ROUTE 1" COPPER LINE TO SAMPLING STATION AND TO CHLORINE ANALYZER.
28. HOSE BIB MOUNTED TO VAULT WALL. SUPPLY FROM 1" COPPER LINE TO SAMPLING STATION.
29. FIRE HYDRANT (RE: 1/C-17)

EQUIPMENT SCHEDULE

1. SUMP PUMP SHALL BE HYDROMATIC MODEL SD25 WITH A FLOAT SWITCH MOUNTED IN THE VALVE VAULT. DISCHARGE PIPE SHALL BE 1-½" PVC SCH 80 PLUMBED THROUGH THE VAULT WALL.
2. LADDER UP SAFETY POST SHALL BE BILCO MODEL 1.
3. ALUMINUM LADDERS SHALL BE AS MANUFACTURED BY HERON INDUSTRIES, INC. OF FORT WORTH OR EQUAL.
   a. LADDER RAILS SHALL BE 1½" IPS SCHEDULE 40 ALUMINUM PIPE(6063 ALLOY) WITH END CAPS.
   b. RUNGS SHALL BE 3/16" THICK ALUMINUM TREAD PLATE (3003 ALLOY) BEND TO FORM 2¼"x1¼" CHANNEL.
   c. TOP RUNG OF LADDER SHALL BE NO MORE THAN 6" BELOW HATCH.
   d. BOTTOM RUNG OF LADDER SHALL BE NO MORE THAN 12" ABOVE FLOOR OF VAULT.
   e. WALL BRACKETS SHALL BE 1½"x2½"x10" BENT PLATE(6030 ALLOY) WITH 8" STANDOFF.
   f. STAINLESS STEEL ATTACHMENT AS RECOMMENDED BY LADDER MANUFACTURER.
4. ACCESS HATCH TO BE BILCO TYPE WITH RECESSED HASP COVERED BY HINGED LID FLUSH WITH SURFACE OR EQUAL, AND SHALL HAVE AN INTRUSION/LIMIT SWITCH WITH ROLLER ARM ACTUATOR TO INDICATE "OPEN". SIGNAL SHALL BE CONNECTED TO SCADA CONTROLS.
5. LOCATION OF SCADA ANTENNA TO BE DETERMINED AT CONSTRUCTION SITE.
6. WATER METER SHALL BE 20" NEPTUNE HIGH PERFORMANCE TURBINE METER. METER STRAINER SHALL INCLUDE A 2" BALL VALVE ON BOTTOM SIDE.
7. PRESSURE TRANSMITTER SHALL BE MODEL "SMART" 3051CG-4-A-2-2-1-B1-M5-T1. RANGED 0 TO 150 PSIG. INSTALLATION SHALL INCLUDE: 1" TAP, 1¾" SS BUSING, ¾" SS COCK, AND FLOOR MOUNTED SUPPORT. THE PRESSURE TRANSMITTER AND ISOLATER SHALL BE MOUNTED IN THE METER VAULT.
8. 2" AIR RELEASE VALVE SHALL BE PER SPECIFICATION 33 12 16.16 OR APPROVED EQUAL.
9. MOTORIZED VALVE ACTUATOR SHALL BE ROTORK PER SPECIFICATION
10. ALL INTERIOR PIPING SHALL BE DUCTILE IRON PAINTED BLUE IN COLOR.
11. FLANGED COUPLING ADAPTER SHALL BE SMITH BLAIR SERIES 913 OR APPROVED EQUAL.
12. BUTTERFLY VALVE SHALL BE VALMATIC OR APPROVED EQUAL.
13. ECLIPSE NO. 88 SAMPLING STATION AS MANUFACTURED BY KUPFERLE FOUNDRY CO. OR APPROVED EQUAL.
14. VAULT VENTILATOR SHALL BE LOREN COOK SRSH-D OR APPROVED EQUAL.

GENERAL NOTES

1. WATERPROOF ALL UNDERGROUND PORTIONS OF VAULT WITH COAL TAR MODIFIED, URETHANE COATING ACCORDING TO TXDOT ITEM 458, TYPE 5.
2. ALL BURIED FITTINGS SHOWN ON THIS DRAWING SHALL BE RESTRAINED MECHANICAL FLEXIBLE JOINT FITTINGS.
3. PIPING ASSOCIATED WITH THE METER STATION SHALL BE DIP.
4. FLANGE PIPE FITTINGS SHALL BE ACCORDING TO THICKNESS CORRESPONDING TO SPECIAL CLASS 53.
5. INSTALL REMOTELY OPERATED MOTOR OPERATED BUTTERFLY VALVE WITH OPERATOR STAND ANCHORED ON TOP SLAB. OPERATOR STAND TO BE PROVIDED BY MOTOR OPERATOR VENDOR AND BE DESIGNED TO WITHSTAND OPERATING CONDITIONS.

Exhibit B
Page 4 of 5

ISSUED FOR CONSTRUCTION

Freese and Nichols, Inc.
Texas Registered Engineering Firm F-2144

ISSUED FOR CONSTRUCTION ON 10/8/2018

THE SEAL THAT ORIGINALLY APPEARED ON THIS DOCUMENT WAS ADMINISTERED BY THE LICENSED PROFESSIONAL ENGINEER TEXAS NO. 87344 DATE: 10/22/2018 THE ORIGINAL DOCUMENT WAS ORIGINALLY ISSUED ON THE DATE INDICATED. ANY ALTERATION OF THIS DOCUMENT WITHOUT THE APPROPRIATE NOTIFICATION OF THE RESPONSIBLE ENGINEERS IN ACCORDANCE WITH THE TEXAS ENGINEERING PRACTICE ACT, IS PROHIBITED.

FREESE AND NICHOLS
4055 International Plaza, Suite 200
Fort Worth, Texas 76109-4895
Phone: (817) 735-7300
Fax: (817) 735-7491

CITY OF KELLER, TEXAS
ALTA VISTA PUMP STATION EXPANSION
CIVIL
FLOW METER AND FLOW CONTROL VAULT DETAILS

NO.	ISSUE	BY	DATE
2	PCM NO.1	KWW	10/22/18
1	ADDENDUM NO. 1	KWW	8/13/18

FAN JOB NO. KEL13205
DATE 06/04/18
DESIGNED RMO
DRAWN SB
REVISED MDC
CHECKED KWW
FILE NAME CV-PS-DT-DET14.DWG

VERIFY SCALE Bar is one inch on original drawing. If not one inch on this sheet, adjust scale.
0 1

SHEET C-10
SEQ. 12

ACAD Rel 21.0s (LMS Tech) User: 02930 Office:
N:\util\Drawings\CV-PS-DT-DET14.dwg LAYOUT: VAULT DETAILS
Oct 22, 2018 - 3:18pm PSLTS: 1 TWIST:
REFERENCES: N:\Standard\34BORDER.DWG N:\util\Base\CV-PS-DT-BASE01.dwg N:\st\Base\ST-VAL-PL-BASE01.dwg N:\st\Base\ST-VAL-PL-BASET.dwg N:\st\Base\ST-VAL-SC-BASE01.dwg N:\st\Base\ST-VAL-PL-BASE01.dwg N:\Standard\34BORDER-SEAL.dwg

Exhibit B
Page 5 of 5

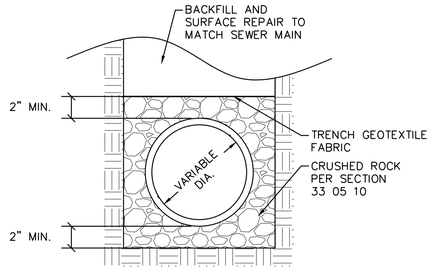

1 — EMBEDMENT FOR SANITARY SEWER SERVICES

NOT TO SCALE — REVISED: 08-31-2012 33 05 10-D202

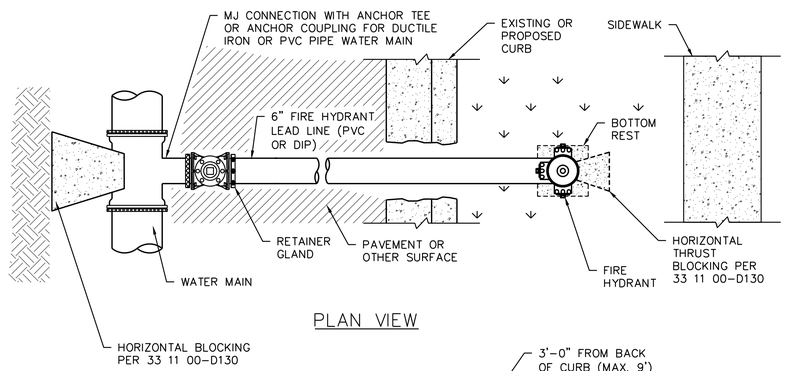

PLAN VIEW

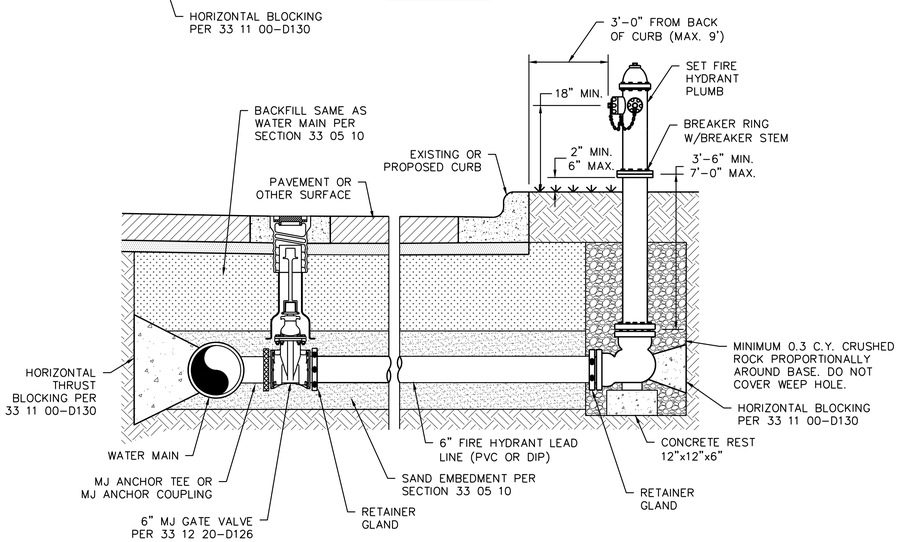

ELEVATION VIEW

NOTE:
1. DO NOT LOCATE FIRE HYDRANT IN SIDEWALK.
2. PROVIDE FOUR (4) FOOT CLEARANCE AROUND FIRE HYDRANT.
3. EXTENSION SECTIONS MAY BE USED AS REQUIRED AND INSTALLED AS PER MANUFACTURER'S INSTRUCTIONS.
4. FOR CONCRETE PRESSURE PIPE OR BURIED STEEL PIPE, PROVIDE AN ISOLATION KIT AND WAX PETROLATUM TAPE COATING PER SECTION 33 04 10 AND FLxMJ GATE VALVE.

3 — 2 — STANDARD FIRE HYDRANT (STRAIGHT)

NOT TO SCALE — REVISED: 06-28-2013 33 12 40-D120

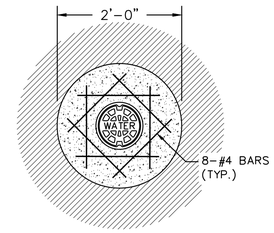

CONCRETE COLLAR (ASPHALT)

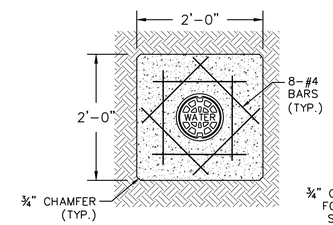

CONCRETE COLLAR (UNIMPROVED SURFACES)

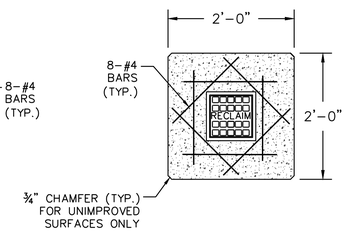

CONCRETE COLLAR (RECLAIMED WATER – ALL LOCATIONS)

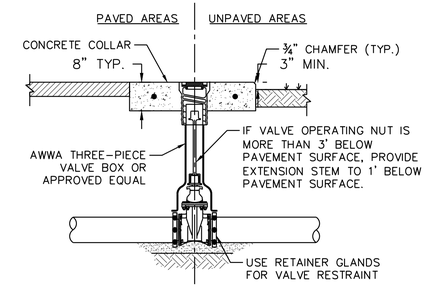

GATE VALVE

NOTE:
1. GATE VALVES SHALL BE RESILIENT SEATED.
2. PROVIDE 3" MIN. OF COVER OVER REINFORCEMENT IN ALL DIRECTIONS.
3. COLLARS SHALL BE 4,000 PSI CONCRETE PER SECTION 03 30 00.

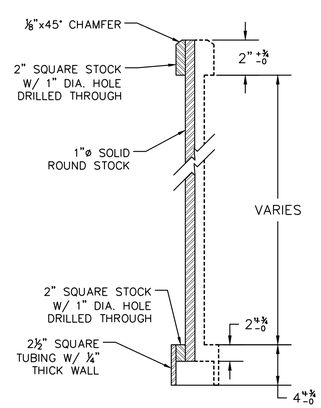

VALVE STEM EXTENSION

NOTE:
1. 1" ROUND SOLID BAR & 2" SQUARE PER ASTM A-108-81. SAE 1020, COLD DRAWN OR BETTER.
2. 2-½" SQUARE TUBING PER ASTM A-512-79, SAE 1020, COLD DRAWN OR BETTER.
3. ALL WELDS SHALL COMPLY WITH A.W.S. CODE FOR PROCEDURE, APPEARANCE AND QUALITY OF WELDS.

3 — WATER DISTRIBUTION GATE VALVE & BOX (12" AND SMALLER)

NOT TO SCALE — REVISED: 08-31-2012 33 12 20-D126

DETAILS SHOWN ON THIS SHEET PERTAIN ONLY TO WORK AT THE METER VAULT WITHIN THE LIMITS DEFINED FOR CITY OF FORT WORTH OWNERSHIP.

REFERENCES TO SPECIFICATIONS NOTED ON THESE DETAILS REFER TO CITY OF FORT WORTH STANDARD SPECIFICATIONS FOR PUBLIC WORKS CONSTRUCTION.

Freese and Nichols, Inc.
Texas Registered Engineering Firm F-2144

ISSUED FOR CONSTRUCTION ON 10/8/2018

THIS SEAL HAS ORIGINALLY APPLIED ON THIS DOCUMENT WAS AUTHORIZED BY KELLY WILLIAMS, P.E. TEXAS NO. 83584 ON 10/22/2018
THE ORIGINAL DOCUMENT WAS STORED AT FREESE AND NICHOLS, INC. IN ACCORDANCE WITH THE RESPONSIBLE ENGINEER'S AN OFFENSE UNDER THE TEXAS ENGINEERING PRACTICE ACT.

FREESE AND NICHOLS
4055 International Plaza, Suite 200
Fort Worth, Texas 76109-4895
Phone: (817) 735-7300
Fax: (817) 735-7491

CITY OF KELLER, TEXAS
ALTA VISTA PUMP STATION EXPANSION
CIVIL
CITY OF FORT WORTH STANDARD DETAILS

NO.	ISSUE	BY	DATE
1	PCM NO.1	KWW	10/22/18
2	ISSUED FOR CONSTRUCTION	KWW	10/08/18
3	ADDENDUM NO. 1	KWW	8/13/18

VERIFY SCALE Bar is one inch on original drawing. If not one inch on this sheet, adjust scale.

FWA JOB NO. KEL13205

		DATE 06/04/18
DESIGNED	RMO	
DRAWN	SB	
REVISED	MDC	
CHECKED	KWW	
FILE NAME	CV-PS-DT-DET09.DWG	

SHEET C-17
SEQ. 19

ISSUED FOR CONSTRUCTION

ACAD Rel 21.0s (LMS Tech) User: 02930 Office:
N:\util\Drawings\CV-PS-DT-DET09.dwg LAYOUT: CITY OF FORT WORTH STANDARD DETAILS
Oct 22, 2018 3:19pm PSLTS: 1 TWIST: 0
REFERENCES: N:\Standard\34BORDER.DWG N:\Standard\34BORDER-SEAL.dwg

Oscar Cantu 10/22/2018 3:19 PM N:\UTIL\DRAWINGS\CV-PS-DT-DET09.DWG