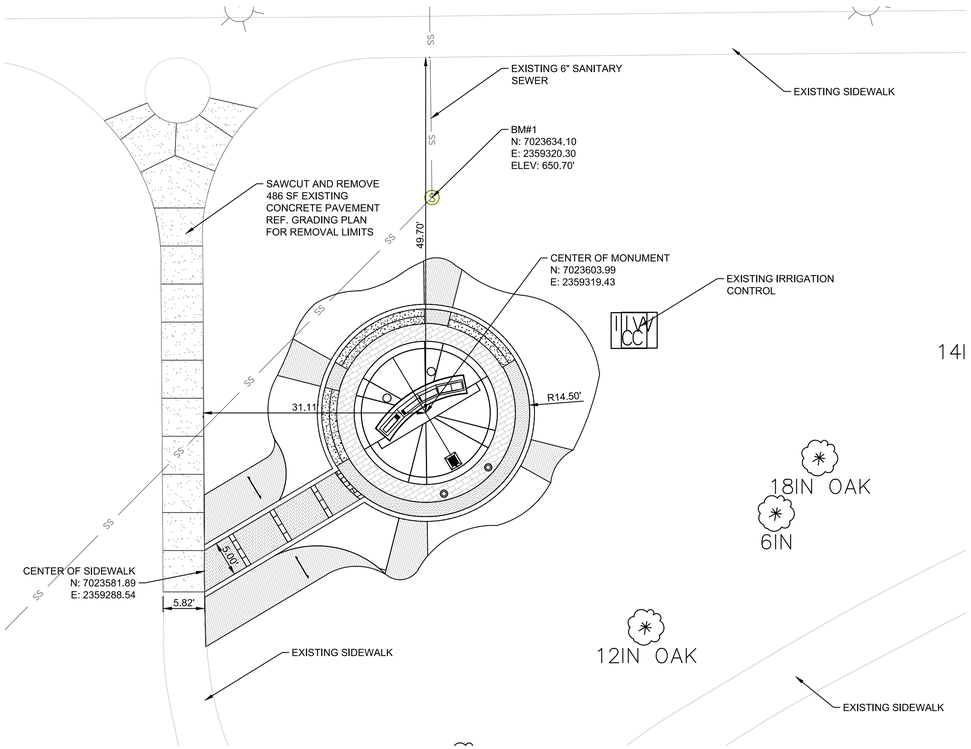

SITE PLAN

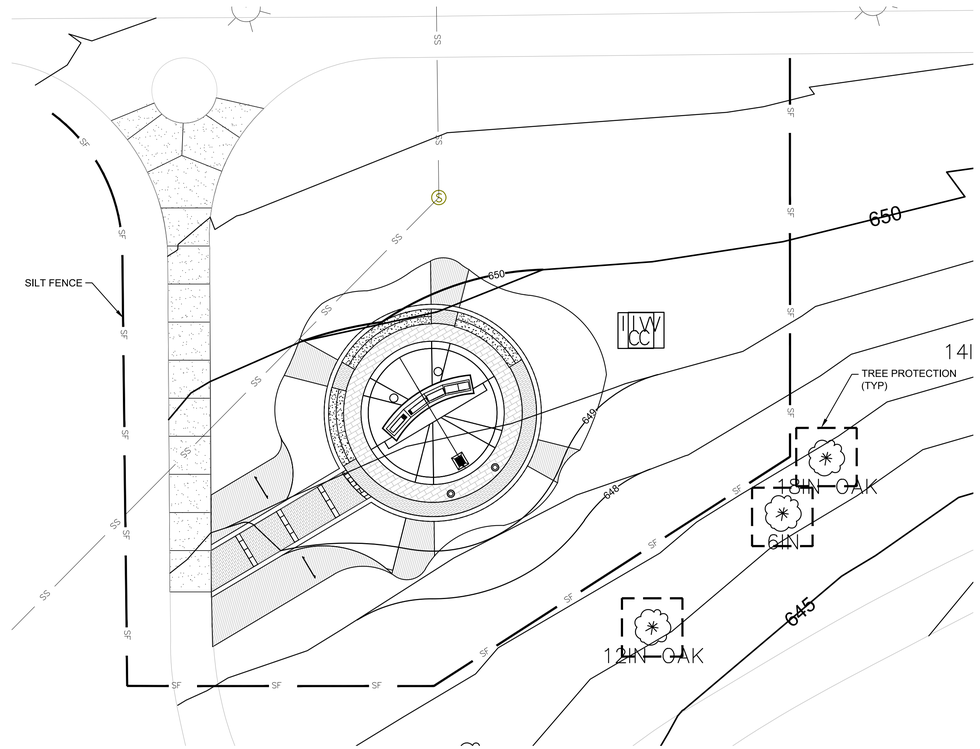

EROSION CONTROL PLAN

NOTE: THE CONTRACTOR SHALL CONTACT THE FOLLOWING AT LEAST 48 HOURS PRIOR TO EXCAVATING IN THIS AREA:

TEXAS 811	1-800-344-8377
ATMOS GAS	972-881-4161
TXU ELECTRIC DELIVERY	1-800-711-9112

CONTRACTOR TO FIELD VERIFY ALL EXISTING UTILITIES VERTICALLY AND HORIZONTALLY PRIOR TO CONSTRUCTION.

N

0 10' 20'
SCALE: 1" = 10'

BENCHMARKS

BM #1 - SANITARY SEWER MANHOLE
N: 7023634.10
E: 2359320.30
ELEVATION: 650.70'

BM #2 - SANITARY SEWER MANHOLE
N: 7023512.61
E: 2359200.29
ELEVATION = 645.10'

STATE OF TEXAS
THOMAS C. BARKOWSKI
99976
LICENSED
PROFESSIONAL ENGINEER
8/1/2019

NO.	DATE	REVISION

GOLD STAR FAMILIES MEMORIAL MONUMENT

SITE AND EROSION CONTROL PLAN

KELLER, TARRANT COUNTY, TEXAS

PELOTON LAND SOLUTIONS

TEXAS REGISTRATION ENGINEERING FIRM NO. 12207
9800 HILLWOOD PKWY, SUITE 250, FORT WORTH, TEXAS 76177
FORT WORTH PHONE: (817) 562-3350

DRAWN: TCB	DATE	PROJECT #	SHEET
DESIGNED: TCB	AUGUST 2019	VLK19001	C2.01
REVIEWER: TCB			

VLK19001 GOLD STAR FAMILIES MEMORIAL MONUMENT

Drawing: G:\CIB\VLK19001 Kellen-Gold-Star-Master Dev\Civil\CAD\VLK19001-C2.01 SITE
Layout: C2.01 Site Plan
Last Saved: 7/22/2019 9:48 AM
Plot Date/Time: 7/31/2019 10:19 AM

NOTE: THE CONTRACTOR SHALL CONTACT THE FOLLOWING AT LEAST 48 HOURS PRIOR TO EXCAVATING IN THIS AREA:

TEXAS 811	1-800-344-8377
ATMOS GAS	972-881-4161
TXU ELECTRIC DELIVERY	1-800-711-9112

CONTRACTOR TO FIELD VERIFY ALL EXISTING UTILITIES VERTICALLY AND HORIZONTALLY PRIOR TO CONSTRUCTION.

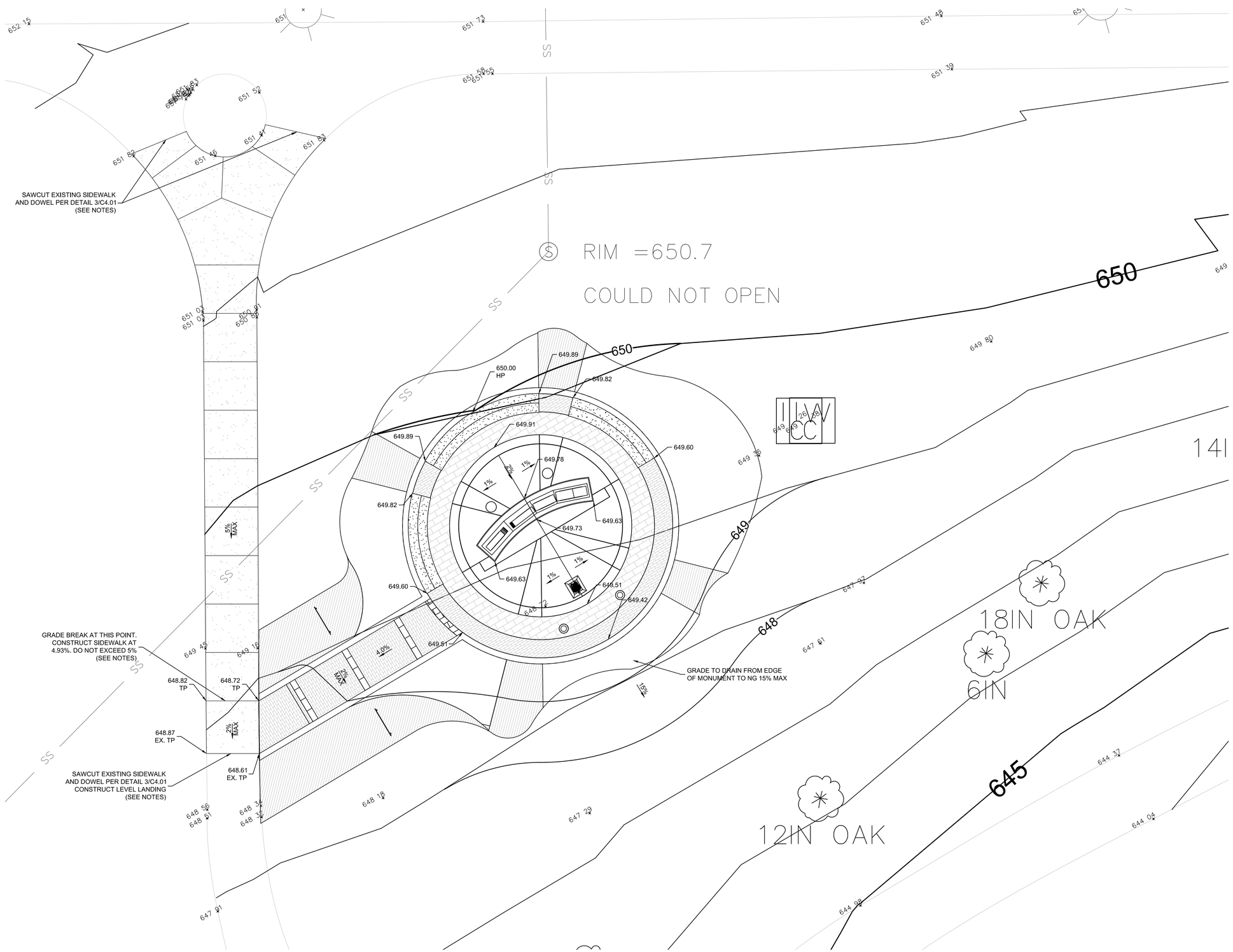

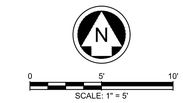

NOTES

1. THE PROPOSED SIDEWALK SHALL HAVE A LEVEL LANDING WITH THE CONNECTION TO THE MONUMENT SIDEWALK. THE LEVEL LANDING SHALL NOT EXCEED 2%.
2. SAWCUT AND REMOVE A SUFFICIENT AMOUNT OF EXISTING SIDEWALK IN ORDER TO CONSTRUCT A PROPOSED SIDEWALK FROM THE LEVEL LANDING TO EXISTING AT NO MORE THAN 5% LONGITUDINAL SLOPE AND 2% CROSS SLOPE. DO NOT EXCEED THESE LIMITS. ANY SIDEWALK THAN EXCEEDS THESE LIMITS MUST BE REMOVED AND REPLACED.
3. CONSTRUCT THE PROPOSED SIDEWALK PER PAVEMENT DETAILS ON C4.01 AND PER PAVING NOTES ON C1.01.

LEGEND

EXISTING SPOT ELEVATION 649.80

STATE OF TEXAS
THOMAS C. BARKOWSKI
99976
LICENSED
PROFESSIONAL ENGINEER
8/1/2019

NO.	DATE	REVISION

GOLD STAR FAMILIES MEMORIAL MONUMENT

GRADING PLAN

KELLER, TARRANT COUNTY, TEXAS

PELOTON LAND SOLUTIONS

TEXAS REGISTRATION ENGINEERING FIRM NO. 12207
9800 HILLWOOD PKWY, SUITE 250, FORT WORTH, TEXAS 76177
FORT WORTH PHONE: (817) 562-3350

DRAWN: TCB	DATE	PROJECT #	SHEET
DESIGNED: TCB	AUGUST 2019	VLK19001	C3.01
REVIEWER: TCB			

VLK19001 GOLD STAR FAMILIES MEMORIAL MONUMENT

Drawing: G:\JOB\VLK19001_Keller-Gold-Star\Master Dev\Civil\CAD\VLK19001-C3.01 GRADING
Layout: 1 Grading Plan
Last Saved: 7/22/2019 9:51 AM
Plot Date/Time: 7/31/2019 10:47 AM

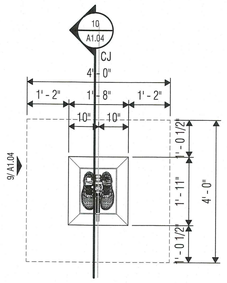

6 SOLDIER'S CROSS BASE PLAN
SCALE: 1/2" = 1'-0"

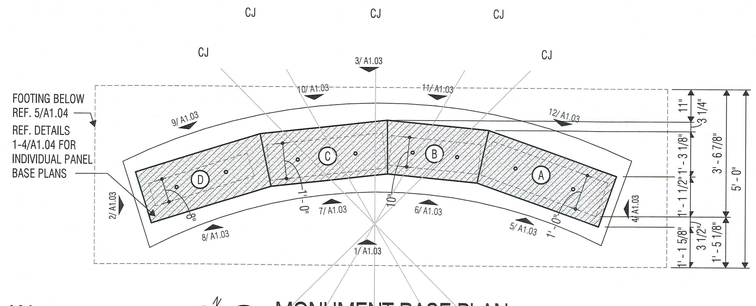

5 MONUMENT BASE PLAN
SCALE: 1/2" = 1'-0"

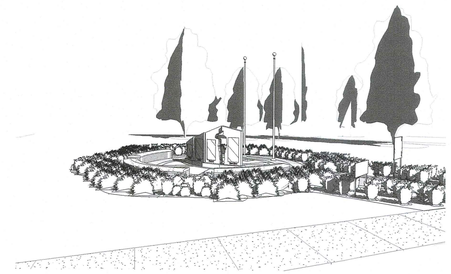

4 3D VIEW - NORTHWEST
SCALE: NTS

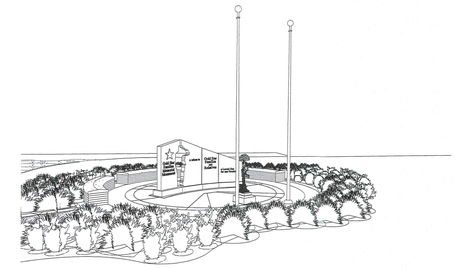

3 3D VIEW - SOUTHWEST
SCALE: NTS

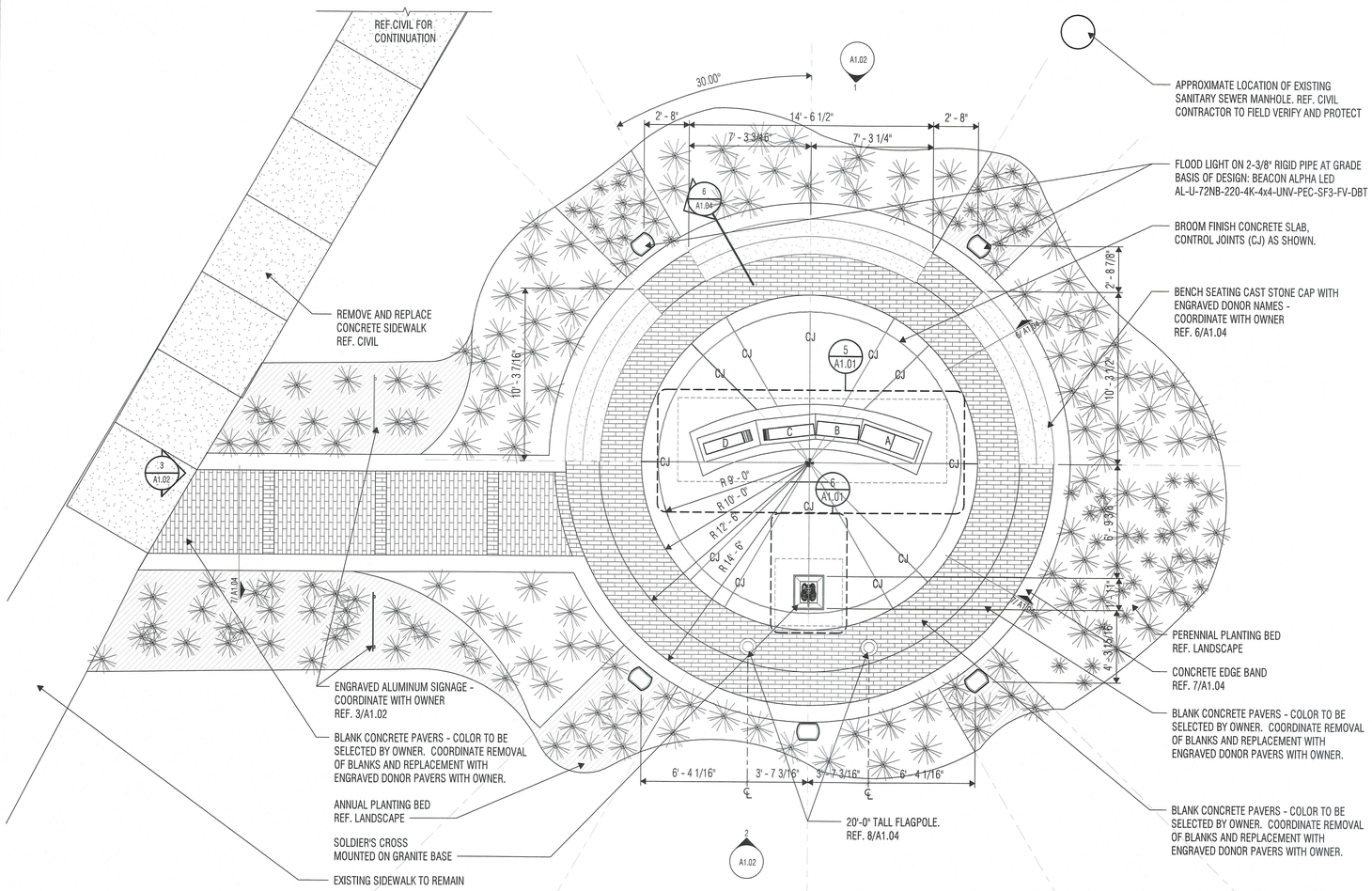

2 PLAZA FLOOR PLAN
SCALE: 1/4" = 1'-0"

TDLR ARCHITECTURAL BARRIERS REGISTRATION

TABS PROJECT #TABS2019014763

SITE PLAN GENERAL NOTES

1. Verify and document existing dimensions and conditions at the site before beginning construction. Notify Architect of conflicts or variations prior to commencement of construction.
2. To prevent damage to existing trees and shrubs in proximity to the Work, provide and maintain protective barriers around those items in accordance with the specified procedures, or in the absence of those procedures, with recognized landscaping and horticultural practices.
3. Electrical power for new lighting to be pulled from nearest light pole and controlled on existing City controls. Contractor to field verify.
4. Existing irrigation system to be protected and reworked as needed by Contractor. Contractor to submit reroute plan to City for approval prior to construction.

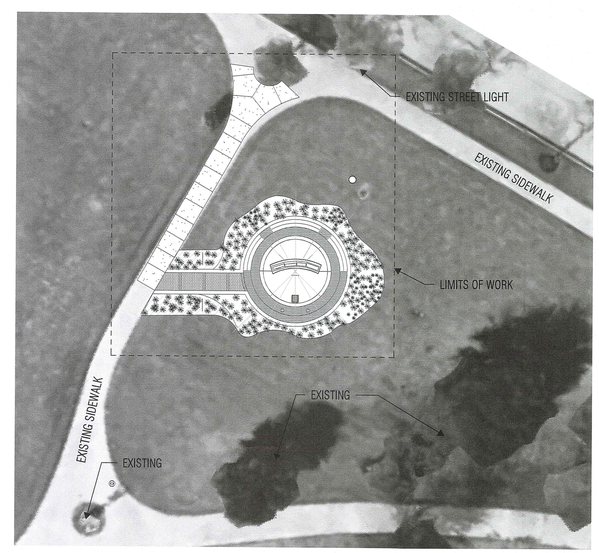

1 ARCHITECTURAL SITE PLAN
SCALE: 1" = 20'-0"

VLK | ARCHITECTS

ARCHITECT
VLK Architects, Inc.
2821 West 7th Street, Suite 300
Fort Worth, Texas 76107
Main Phone: 817.633.1600
www.vlkarchitects.com

CIVIL ENGINEER
Peloton Land Solutions
9800 Hillwood Parkway, Suite 250
Fort Worth, Texas 76117
Main Phone: 817.562.3350

CITY OF KELLER
KELLER, TEXAS

Permit Submittal

REGISTERED ARCHITECT SUSAN S. HARRIS 19447 STATE OF TEXAS
07/11/2019

07/11/2019

REVISIONS
Revision No.

Director SLH	Drawn By DS
Designer DVW	Quality Control MM
Proj. Arch. DVW	

PROJECT NO.

SHEET TITLE
PLANS

SHEET NO.
A1.01

GOLD STAR FAMILIES MEMORIAL MONUMENT

COPYRIGHT © 2015 VLK ARCHITECTS

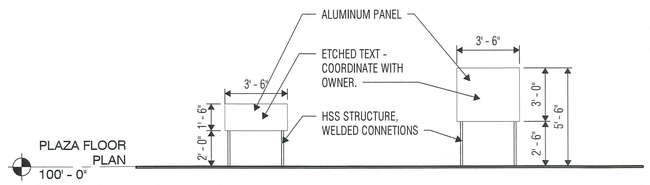

3 ENTRANCE SIGNAGE ELEVATION

SCALE: 1/4" = 1'-0"

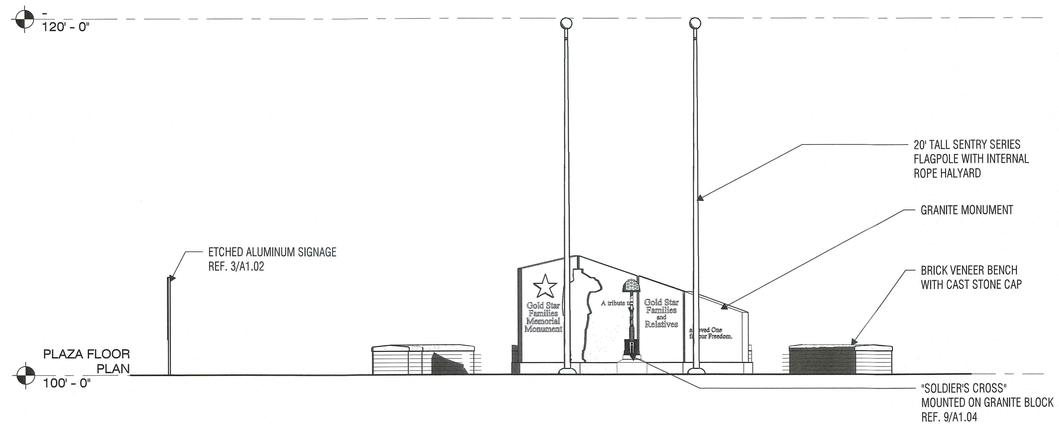

2 ELEVATION - SOUTH

SCALE: 1/4" = 1'-0"

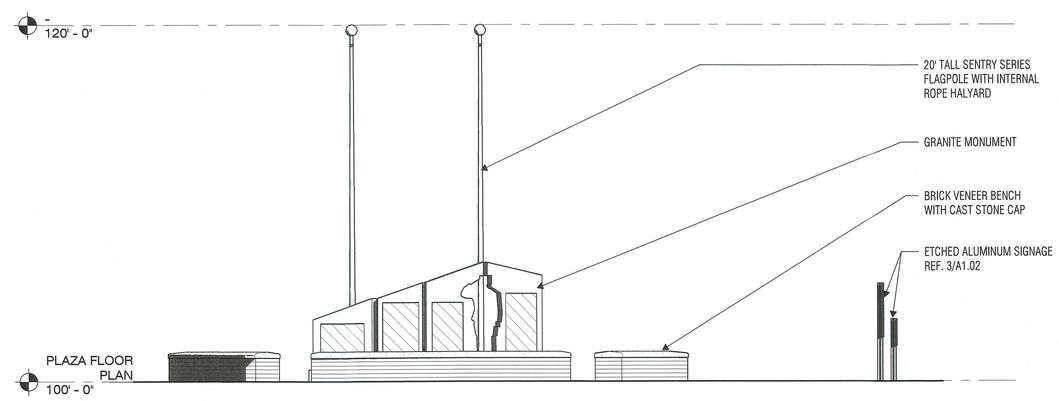

1 ELEVATION - NORTH

SCALE: 1/4" = 1'-0"

VLK | ARCHITECTS

ARCHITECT

VLK Architects, Inc.
2821 West 7th Street, Suite 300
Fort Worth, Texas 76107
Main Phone: 817.633.1600
www.vlkarchitects.com

CIVIL ENGINEER

Peloton Land Solutions
9800 Hillwood Parkway, Suite 250
Fort Worth, Texas 76117
Main Phone: 817.562.3350

CITY OF KELLER
KELLER, TEXAS

Permit Submittal

REGISTERED ARCHITECT SHAWN S. HARRIS 9447 STATE OF TEXAS
07/11/2019

07/11/2019

REVISIONS

Revision No.

Director SLH	Drawn By DS
Designer DVW	Quality Control MM
Proj. Arch. DVW	

PROJECT NO.

SHEET TITLE

ELEVATIONS

SHEET NO.

A1.02

GOLD STAR FAMILIES MEMORIAL MONUMENT

COPYRIGHT © 2015 VLK ARCHITECTS

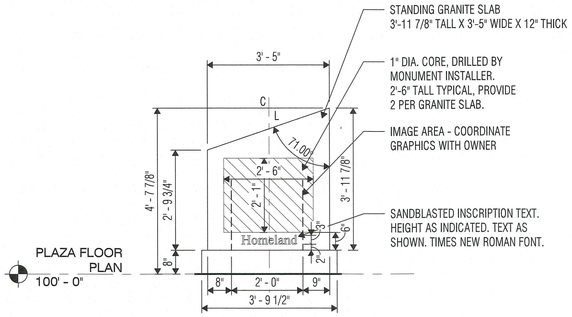

12 ELEVATION NORTH - PANEL A
SCALE: 1/2" = 1'-0"

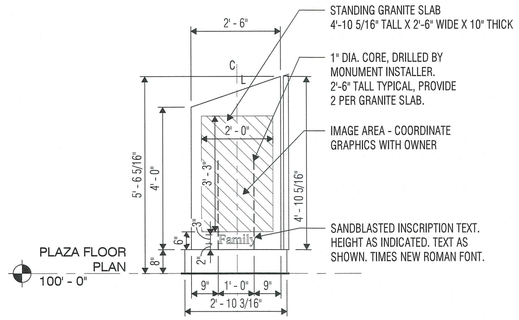

11 ELEVATION NORTH - PANEL B
SCALE: 1/2" = 1'-0"

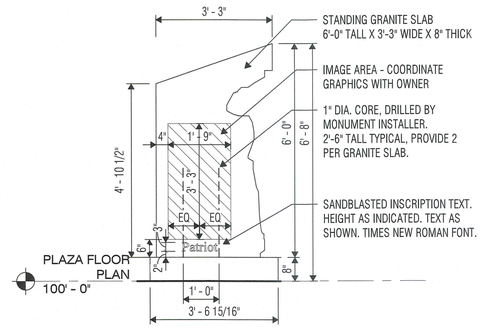

10 ELEVATION NORTH - PANEL C
SCALE: 1/2" = 1'-0"

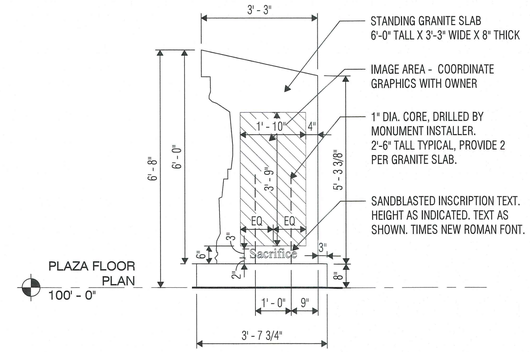

9 ELEVATION NORTH - PANEL D
SCALE: 1/2" = 1'-0"

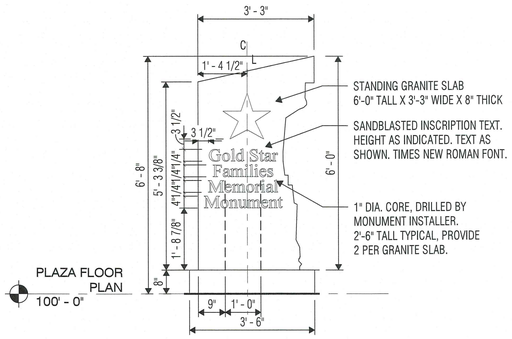

8 ELEVATION SOUTH - PANEL D
SCALE: 1/2" = 1'-0"

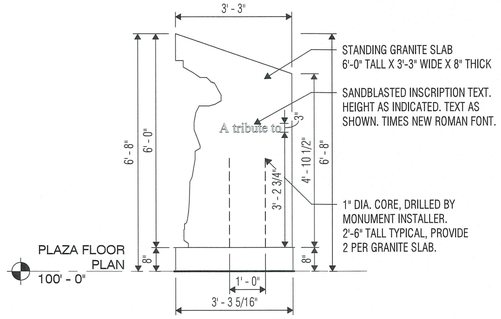

7 ELEVATION SOUTH - PANEL C
SCALE: 1/2" = 1'-0"

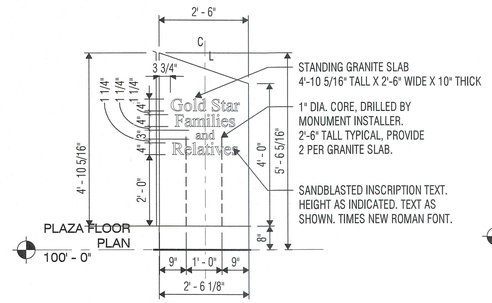

6 ELEVATION SOUTH - PANEL B
SCALE: 1/2" = 1'-0"

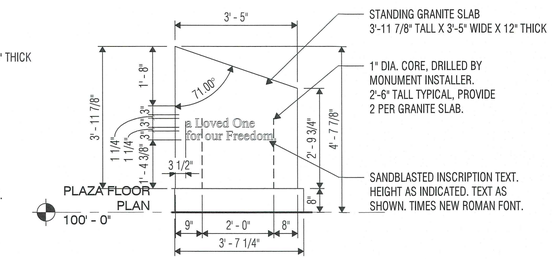

5 ELEVATION SOUTH - PANEL A
SCALE: 1/2" = 1'-0"

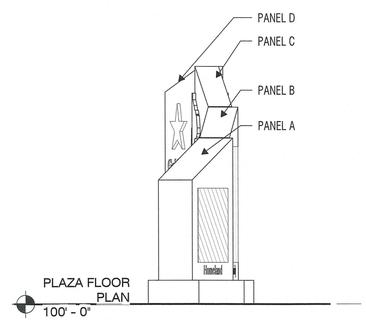

4 EAST ELEVATION
SCALE: 1/2" = 1'-0"

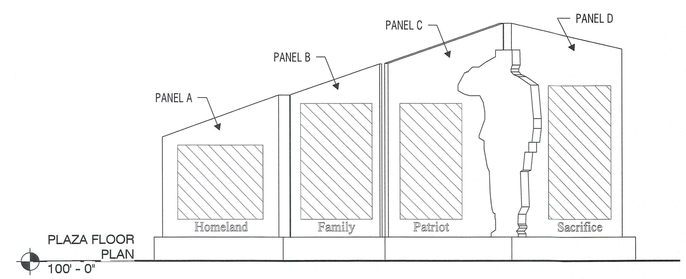

3 NORTH ELEVATION
SCALE: 1/2" = 1'-0"

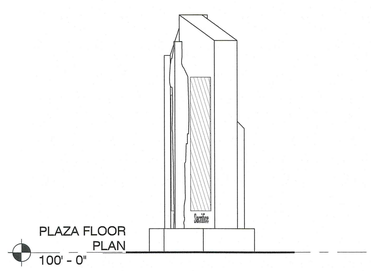

2 WEST ELEVATION
SCALE: 1/2" = 1'-0"

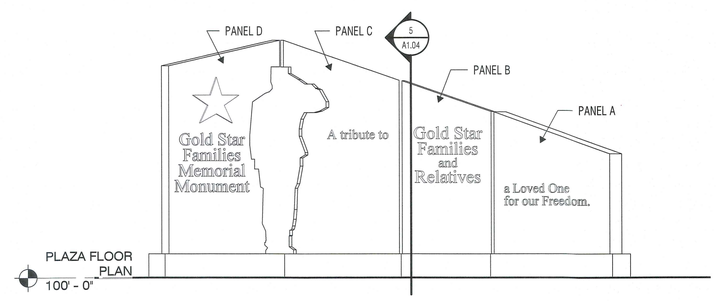

1 SOUTH ELEVATION
SCALE: 1/2" = 1'-0"

VLK | ARCHITECTS

ARCHITECT
VLK Architects, Inc.
2821 West 7th Street, Suite 300
Fort Worth, Texas 76107
Main Phone: 817.633.1600
www.vlkarchitects.com

CIVIL ENGINEER
Peloton Land Solutions
9800 Hillwood Parkway, Suite 250
Fort Worth, Texas 76117
Main Phone: 817.562.3350

CITY OF KELLER
KELLER, TEXAS

Permit Submittal

REGISTERED ARCHITECT SLOAN E. HARDIN 19447 STATE OF TEXAS
07/11/2019

07/11/2019

REVISIONS
Revision No.

Director SLH	Drawn By DS
Designer DVW	Quality Control MM
Proj. Arch. DVW	

PROJECT NO.

SHEET TITLE
DETAILS

SHEET NO.
A1.03

GOLD STAR FAMILIES MEMORIAL MONUMENT

COPYRIGHT © 2015 VLK ARCHITECTS

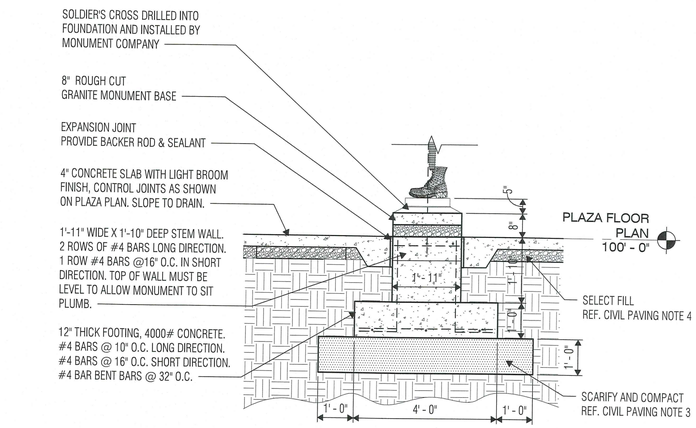

10 SOLDIER'S CROSS DETAIL
SCALE: 1/2" = 1'-0"

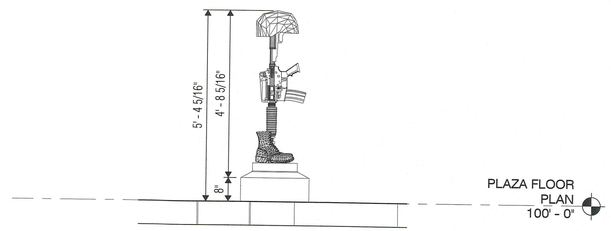

9 SOLDIER'S CROSS ELEVATION
SCALE: 1/2" = 1'-0"

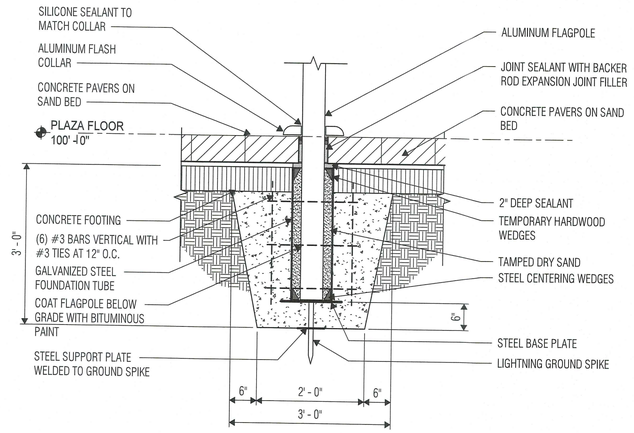

8 FLAGPOLE DETAIL
SCALE: 3/4" = 1'-0"

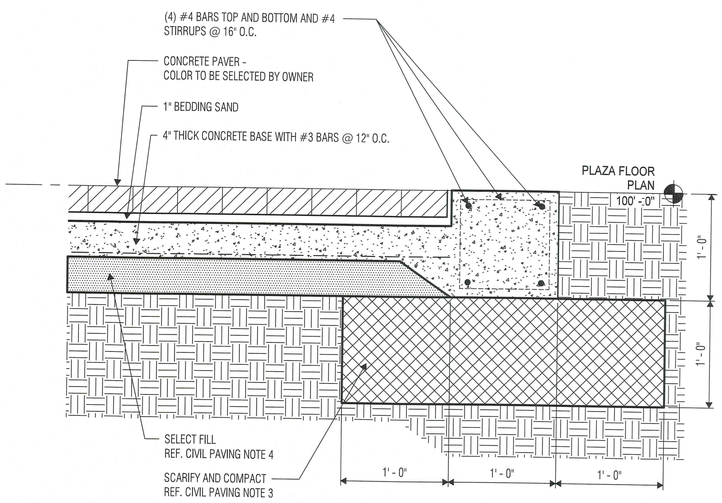

7 PAVER DETAIL
SCALE: 1 1/2" = 1'-0"

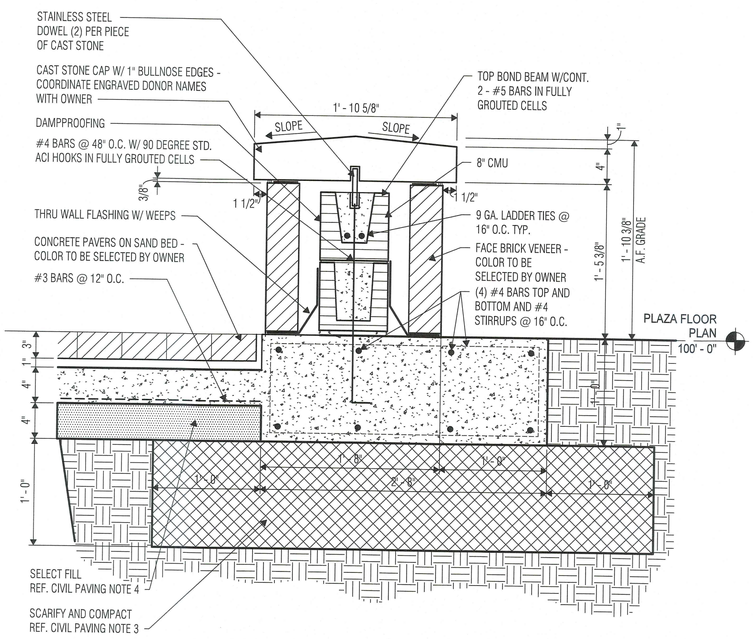

6 BENCH DETAIL
SCALE: 1 1/2" = 1'-0"

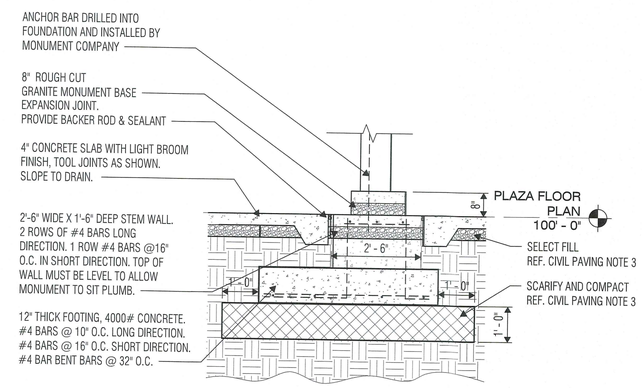

5 MONUMENT DETAIL
SCALE: 1/2" = 1'-0"

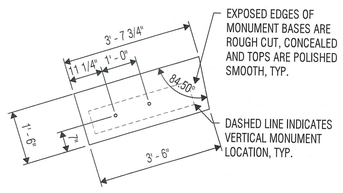

4 BASE PLAN - PANEL D
SCALE: 1/2" = 1'-0"

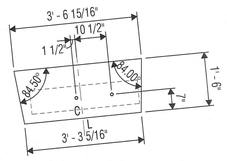

3 BASE PLAN - PANEL C
SCALE: 1/2" = 1'-0"

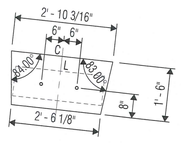

2 BASE PLAN - PANEL B
SCALE: 1/2" = 1'-0"

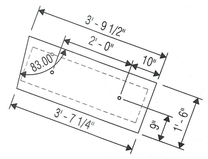

1 BASE PLAN - PANEL A
SCALE: 1/2" = 1'-0"

VLK | ARCHITECTS

ARCHITECT

VLK Architects, Inc.
2821 West 7th Street, Suite 300
Fort Worth, Texas 76107
Main Phone: 817.633.1600
www.vlkarchitects.com

CIVIL ENGINEER

Peloton Land Solutions
9800 Hillwood Parkway, Suite 250
Fort Worth, Texas 76117
Main Phone: 817.562.3350

CITY OF KELLER
KELLER, TEXAS

Permit Submittal

REGISTERED ARCHITECT
SLOAN S. HARRIS
19445
STATE OF TEXAS

07/11/2019

07/11/2019

REVISIONS

Revision No.

Director SLH	Drawn By DS
Designer DVW	Quality Control MM
Proj. Arch. DVW	

PROJECT NO.

SHEET TITLE

DETAILS

SHEET NO.

A1.04

GOLD STAR FAMILIES MEMORIAL MONUMENT

COPYRIGHT © 2015 VLK ARCHITECTS